Collection of pole mounted projector, for urban lighting, available with asymmetric and symmetric reflector. Covers a wide range of applications and gives a high flexibility of use. Exceptional European build quality with high corrosion resistant finish.

Luminaire characteristics:	**Power input:** 45.5W **Lumens:** 3 900lm (for 3000K) **Luminaire efficacy:** 85lm/W
Source:	White LED (LM-80 Tested) 3000K: 90CRI 4000K: 90CRI
Lumen maintenance:	>70% of initial lumens at 50 000 hours (L70) (LM79 tested)
Optics:	Asymmetrical or symmetrical street optic.
Material:	Body: Die cast aluminum Reflector: 99.98% pure anodized aluminum Diffuser: Methacrylate Hardware: Stainless steel screws and silicone gaskets.
Mounting:	Install on 4" (102mm) diameter pole, using mounting accessory. Supplied with 20ft of power cable.
Electrical:	See remote power supply options on page 5.
Finish:	White or aluminum gray painted finish follows a double powder paint in 3 step process: surface treatment containing ceramic nanoparticles (Bonderite). Epoxy primer paint. Polyester powder paint with high resistance against UV rays and harsh weather conditions.
Weight:	9lbs (4.1kg).
EPA:	1.1ft² (0.1m²)
Warranty:	5 year limited warranty.
Ratings:	IP66, IK10
Certification:	cULus listed for Wet location

DIMENSIONS

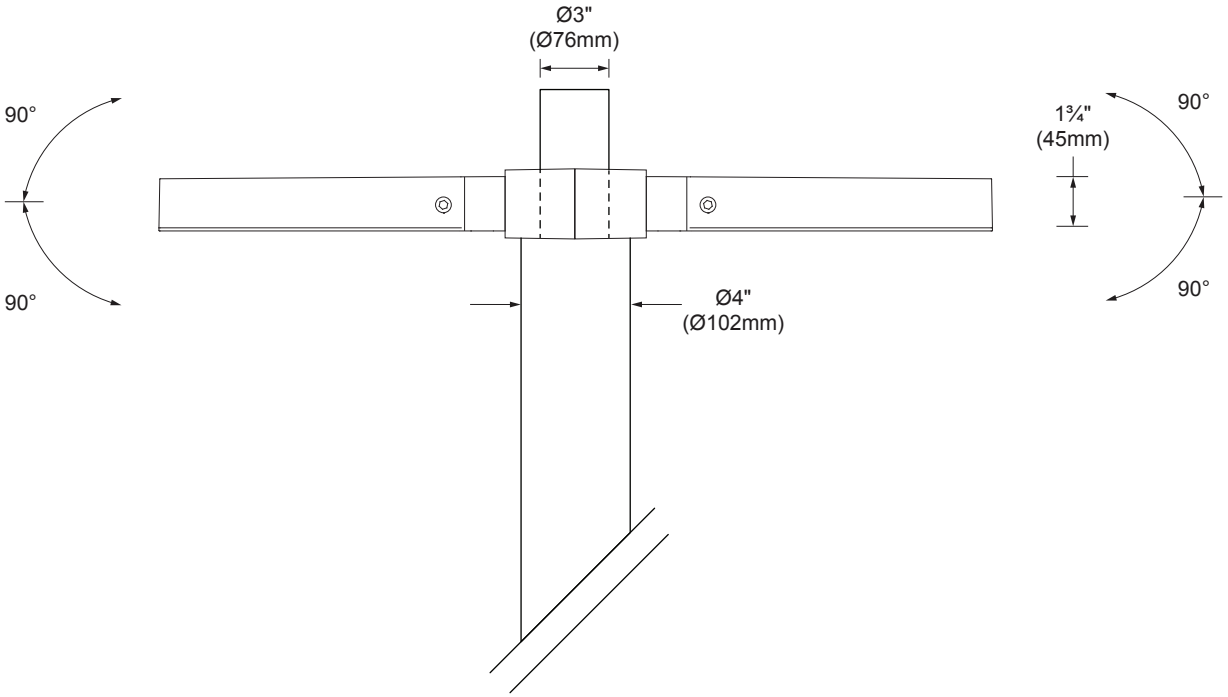

SIDE VIEW

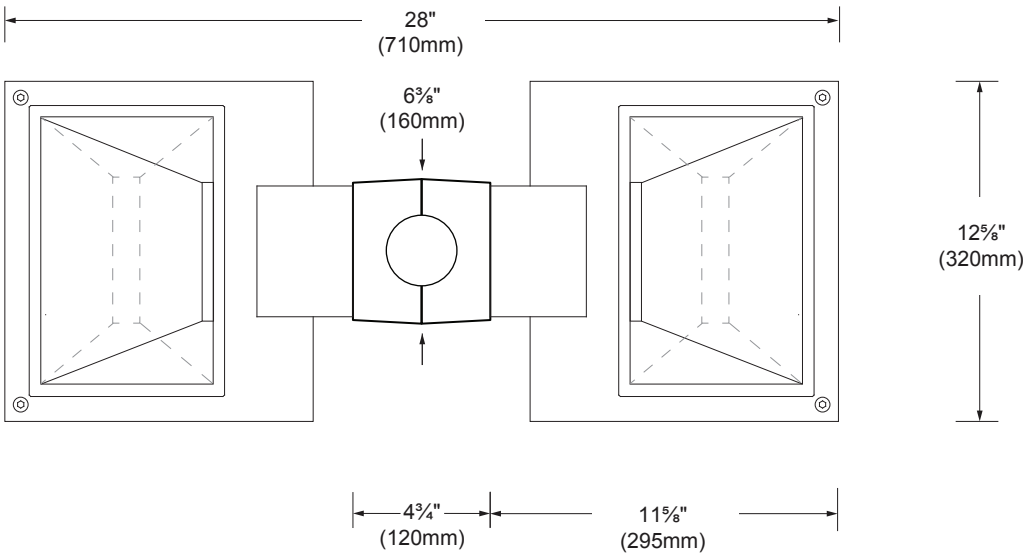

BOTTOM VIEW

TECHNICAL DATA
Visit sistemalux.com for complete photometric data.

LOAD (W)	CCT (K)	CRI	OPTIC	LUMENS (lm)	EFFICACY (lm / w)	MAX CANDELA (cd)	MODELS
45.5W	4000K	90	Asymmetrical	2 935	65	2 170	S.3070N
	3000K			2 795	61	2 077	S.3070W
	4000K		Symmetrical	4 000	88	1 580	S.3075N
	3000K			3 910	86	1 555	S.3075W

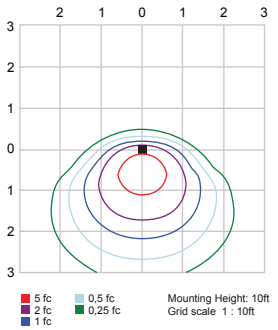

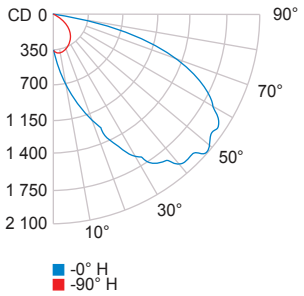

3000K - 90 CRI - Asymmetrical

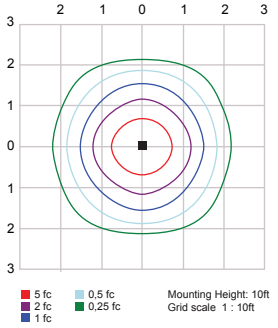

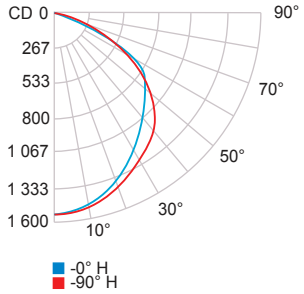

3000K - 90 CRI - Symmetrical

POLE Ø4" (Ø 102mm)
With tenon Ø3" (Ø76mm), H: Min: 3¾" (96mm)

☐ **SUPPLIED BY OTHER**
Contact factory for pole details

_____

☐ **SUPPLIED BY SISTEMALUX**
Contact factory for pole details

HEIGHT: _____ FT

MODEL: Straight

INSTALLATION: Anchor bolts

ACCESS DOOR: Included (3' from ground)

MATERIEL: ☐ Aluminum
☐ Steel

FINISH: ☐ 14 - Gray
☐ Custom RAL _____

MOUNTING

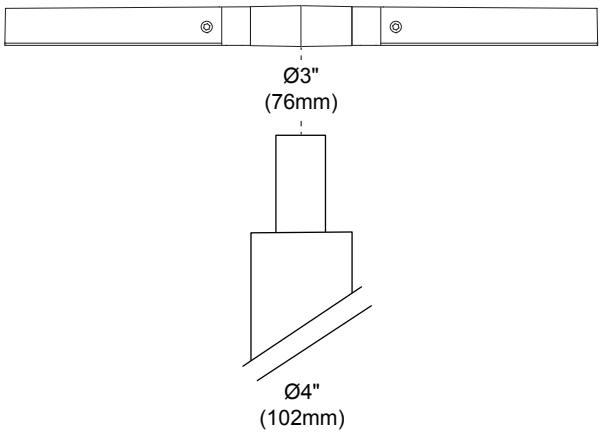

ORDERING INFO

RESET

- POL - REM -
FIXTURE

MODEL
☐ **S.3070N -** 4000K, Asymmetrical ☐ **S.3070W -** 3000K, Asymmetrical ☐ **S.3075N -** 4000K, Symmetrical ☐ **S.3075W -** 3000K, Symmetrical

MOUNTING
■ **POL -** Pole mounted

ELECTRICAL
■ **REM -** 24V remote power supply

FINISH
☐ **01 -** White ☐ **14 -** Aluminum gray

ACCESSORIES
(TO BE ORDERED SEPARATELY)

☐ **S.3044 -** Single pole mount For tenon Ø3" (Ø76mm)
Dim: 7¾" x 6⅜", H:1¾" (1.8lb)
Dim: 145 x 160, H:45mm (0.8kg)

☐ **S.3045 -** Double pole mount For tenon Ø3" (Ø76mm)
Dim: 4¾" x 6⅜", H:1¾" (1.5lb)
Dim: 120 x 160, H:45mm (0.7kg)

REMOTE POWER SUPPLY OPTIONS (TO BE ORDERED SEPARATELY)

Requirement for one (1) fixture: 42W, 24V DC (Remote fixture only)

	Watts	Min-Max	Voltage	Rated	Dimming protocol	Box dimensions	Max distance 18AWG	Code
☐	75	1	120-277V	Outdoor	None	11¼" X 3" X 1¾" (285 X 75 X 42mm)	30ft (9m)	4545-0024-075-UNV-ND
☐	80	1	120V	Outdoor	Leading and trailing edge (ELV and TRIAC)	14" X 5" X 2" (356 X 127 X 51mm)	30ft (9m)	4551-0024-080-120-LTE
☐	200	1-2 Per channel (Max 4)	120-277V	Outdoor	None	12" X 4½" X 2⅜" (305 X 114 X 60mm)	30ft (9m) Per channel	4546-0024-200-2C-UNV-ND

SISTEMALUX
9320 Boul. St-Laurent, suite 100, Montréal (Québec) Canada H2N 1N7, P.: 514.523.1339 F.: 514.525.6107 www.sistemalux.com